http://hdl.handle.net/1813/43861

Integrated
Pest
Management

Beasts Begone!

A Practitioner's Guide to IPM in Buildings

Cornell
Cooperative
Extension

The New York State IPM Program

We encourage people to adopt a sustainable approach to managing pests, using methods that minimize environmental, health, and economic risks. For more information: NYS Integrated Pest Management Program, 1-800-635-8356; NYSAES Geneva, NY 14456; <www.nysaes.cornell.edu/ipmnet/ny>.

For additional copies of this manual (IPM No. 609) contact your local Cooperative Extension office or the NYS IPM Program.

Beasts Begone was produced by the Community IPM program which is funded by Cornell University, Cornell Cooperative Extension, and the Department of Environmental Conservation. Author: Lynn Braband. Editing/Design: Jennifer Webster. Artwork: Jim Engel and Karen English-Loeb except as otherwise noted. The recommendations in this publication are not a substitute for pesticide labeling. Read the label before applying any pesticide. Cornell University is not responsible for any injury or damage to person or property arising from the use of this information. Cornell Cooperative Extension provides equal program and employment opportunities. Printed on recycled paper. 4M AP 7/00.

Tracks and scats of Norway rat and house mouse; scats of gray squirrel, white-footed mouse, red squirrel, flying squirrel and chipmunk from A Field Guide to Animal Tracks. Copyright 1950 by Olaus J. Murie. © 1974 by Margaret E. Murie. Reprinted by permission of Houghton Mifflin Co. All rights reserved.

Tracks of eastern chipmunk, eastern gray squirrel, raccoon, red squirrel, shorttail shrew, weasel, white-footed mouse, woodchuck, and striped skunk reprinted with permission from the New England Animal Tracks poster, ©1980, 1982, by Delorme Publishing, Inc.

Line drawings of woodchuck (p. 34), skunk (p. 5 & p. 35), raccoon (p. 9), weasel (p. 37), and eastern chipmunk (p. 2) by Donna Curtin. Reproduced from "Wildlife Notebook: Sketches of Selected Wildlife in New York State" with permission from Cornell Cooperative Extension. "Wildlife Notebook" is available from the Cornell University Media and Technology Resource Center.

Drawings of "just as I suspected..." (p.40), box trap (p.10), and mouse trap (p.11) from Pennsylvania State University's "Pest Management and Environmental Quality." Used by permission.

Sketch of flying squirrel (p. 29) from NASA and Cislunar Aerospace, Inc. Used by permission.

Drawing of groundhog fence (p. 19), illustrating a technique for building a rat wall) reprinted with permission from the North Carolina Agricultural Extension Service.

Contents

Introduction 4

Reasons for Entry 4

Damage and Risk 4

Dealing with Animals 4

Inspections 5

Steps to an Inspection 5

Removing Animals 7

Getting Started 7

Legal Considerations 8

Animal Removal Techniques 9

Excluding Animals 12

Before Excluding an Animal 12

Exclusion Materials and Procedures 13

Appendix A: Animal Identification 16

Appendix B: Inspection Form 31

Appendix C: Animal-Specific Form 32

Appendix D: Helpful Resources 33

Introduction

Raccoons, squirrels, woodchucks, mice, bats, and snakes can be nuisances to homeowners and building managers. These animals cause damage and/or pose health risks when they enter buildings. This manual provides an overview of the different ways to solve animal problems in and around buildings. It is intended for use by property managers and pest control operators who are unfamiliar with nuisance wildlife control. The species and techniques are applicable to New York State and may be relevant in other states throughout the Northeast.

Reasons for Entry

Animals enter homes because they are seeking shelter, food, and places to cache food. Sometimes they are just exploring. Animals behave this way to meet their needs. Although these behaviors may have negative results for us, animals rarely intend to be malicious. The attitude of the inspector should be one of caution and respect; the goal is to enable the humans and other animals to co-exist with better boundaries!

Damage and Risk

When animals enter human structures, the results range from simple nuisance (such as disturbing noises) to health risks and significant destruction. Animals can damage woodwork, plastic, and other materials in a variety of ways. They can chew electrical wires, causing system failures and fires, and can soil insulation. Birds release fecal droppings that mar building exteriors. Some animals carry diseases and parasites that are zoonotic that is, they can be transmitted from animals to humans.

Dealing with Animals

The three major steps for solving and preventing animal problems are inspection, removal (if necessary), and exclusion. Inspections provide important information about current problems as well as on conditions that may create future problems. Any animals present in the building will need to be removed. Effective exclusion is the best approach for the prevention of structural animal problems.

Inspections

Before you can determine if there is a problem or contemplate solutions, you must conduct a thorough inspection. With information from an inspection, an experienced observer can provide management options for problems associated with uninvited animal guests.

Steps to an Inspection

The major steps in the process are preparation, contact interview, inspection, and recommendations. The specifics depend on the type of building and the animals involved. Brief descriptions of signs and problems associated with the animals that commonly enter structures are included in Appendix A.

Preparation

Use a site map and an inspection form. A site map is usually a floor plan of the building. A generic inspection form, such as that found in Appendix B, is applicable to most structures and animals. Inspection forms could also be developed that are specific to a particular location, such as a certain school building, or to a particular animal (Appendix C).

Contact Interview

If someone who is not on site daily is inspecting the building, that person should interview an appropriate contact, such as a facility manager, custodian, or kitchen staff member.

In the interview, ask either general or probing questions. A general question might be, "Please describe what you know about the problem," or "Have you noticed any problems?" This type of question provides an opportunity for the contacts to give their perspective, can lead to probing questions, and may guide where to start the inspection.

Probing questions focus on specific information. They may address any of the following: noises; sightings of animals or signs; odors; time of day of animal activity; frequency of activity; and health concerns, such as contacts between wild animals and humans or pets. Occasionally respondents misinterpret mechanical sounds (smoke alarm with low battery, swaying utility line, etc.) as animal noises. Probing questions can help to determine the likelihood of this error.

Inspection Process

Follow appropriate safety precautions throughout the inspection by paying attention to equipment and being aware of potentially harmful situations. Keep ladders in good repair and choose ones of appropriate construction and height for the work that needs to be done. Secure them so that they will not accidentally fall over, and use safety helmets to prevent head injuries and possible death. When climbing steep roofs, you may need safety ropes and harnesses.

Respirators are necessary for the safe inspection of most crawl spaces. HEPA filters, which filter out small particles such as hantavirus, are recommended. Goggles, disposable gloves, and coveralls provide additional personal protection. Consult the

Equipment

The most important piece of inspection equipment is a good flashlight. Other helpful equipment:

- extendible mirror for viewing less accessible locations
- stepladder for interior inspections
- larger ladders for exterior inspections
- binoculars for tall structures
- ultraviolet light source for detecting rodent urine stains
- animal identification books, including those that show mammal tracks and droppings

Safety equipment includes respirators (preferably with a HEPA filter); goggles and kneepads for when you inspect crawl spaces; disposable gloves; safety helmets; bungee cords or other means of securing ladders for use; and safety ropes/harnesses.

Occupational Safety and Health Administration (OSHA) guidelines for safety practices on ladders, the use of respirators and other equipment, and any other health or safety concerns.

Whether you should focus on the interior or exterior for your inspection will depend on what you are looking for. For example, the presence of raccoons or squirrels can often be determined by an outside inspection, and an inside inspection may not be needed. On the other hand, interior inspections for bats, mice, or rats can help focus the exterior inspection for entry holes. What you may be looking for (such as entry hole sizes and probable locations) will vary according to species.

Whether inspecting interiors or exteriors, look for and record current, past, and potential problems on the inspection form and site map. Note entry holes, fecal droppings, runways (such as in insulation), tracks, rub marks, urine stains, gnaw marks, food caches, nests, odors, noise (vocalizations, movements), evidence of past control efforts (such as empty pesticide containers or old repairs), burrows, access routes, carcasses, and live animals. Note any structural sites that currently do not have problems but are vulnerable to future access or damage by animals.

Interiors. Inspect the building systematically. Work your way from the top of the building to the bottom. Within each room, move either clockwise or counterclockwise. Pay particular attention to room corners and underneath and behind furniture. If suspended ceilings are present, push up the panels in several locations to check above the ceiling. Inspect attics, basements, closets, built-in drawers, areas underneath sinks, plumbing/utility accesses, and miscellaneous crawl spaces.

Exteriors. Outside, thoroughly inspect the foundation, then repeat the inspection on the upper portions of the structure. Be sure to check areas beneath decks, crawl spaces, dumpsters, garbage storage areas, piles of firewood, lumber, or debris. Inspect garages, eaves, dormers, windows, architectural returns, vents, drip edges, soffits, chimneys, roof corners, and roof tie-ins.

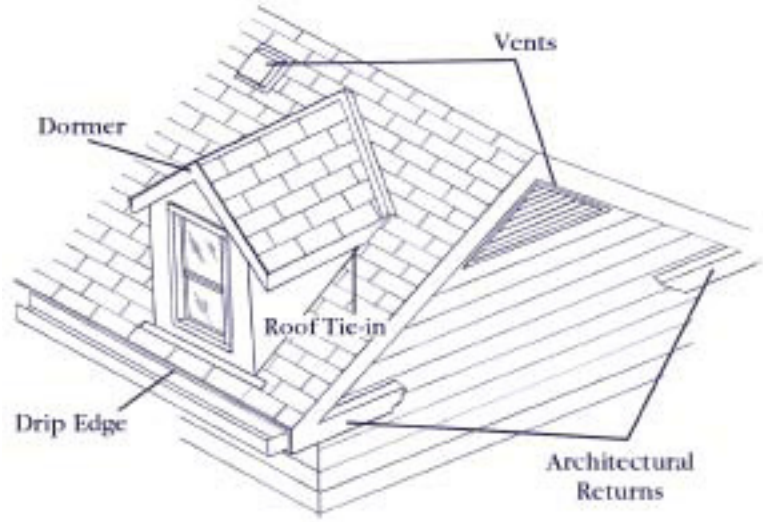

Recommending Management Options

Using the findings of the inspection, recommend management options, in writing, to the contact person. Four possibilities are animal removal, exclusion/repair, prevention of future problems, and monitoring (see Appendix B). Techniques for animal removal include capture, one-way doors, repellents, and pesticides. Exclusion generally refers to the closure of entry sites to prevent reentry by animals. If monitoring for vertebrate problems is feasible, describe where the monitoring should be done and the techniques to be used. Possible techniques include glueboards, tracking stations, and traps. Explain when to check the monitoring stations.

Discuss the inspection results and management recommendations with the contact person. Show photographs of on-site situations that are difficult to see. A photo album of structural problems, typical animal damage, management options, and prevention techniques can also be an important resource.

Removing Animals

Getting Started

When you've got bats in the belfry, mice in the basement, or snakes in the bathroom, you need to know your options for liberating the building from uninvited animal guests. Homes, schools, and other municipal buildings are vulnerable to invasion by raccoons, woodchucks, mice, bats, birds, and snakes. This section provides you, as a building manager or caretaker, with some options for removing unwanted animals.

Before choosing a technique for removing an animal from a building, you should consider the following.

Know the law.

Generally, the state has jurisdictional responsibility for wild animals. The main regulatory agency in New York State is the Department of Environmental Conservation (in other states, check with appropriate wildlife agencies). In the case of migratory birds or federally endangered species, the U.S. Fish and Wildlife Service also has jurisdiction. There may also be local ordinances to consider.

Assess health and safety factors.

Evaluate risks to the operator associated with a particular animal as well as with removal techniques. Be familiar with the safety measures necessary to reduce the risk of contracting zoonotic diseases and use proper precautions on ladders and with other equipment. Pest Control Technician Safety Manual by Pinto and Associates is a good resource. Also, consider risks to the users of the building. Expedient removal of animals that pose a serious threat to the public is important; however, be sure to use removal techniques that pose the least risk to the operator and the public.

Consider the humaneness.

Generally, humaneness refers to minimizing the pain felt by an animal. A quick lethal technique is often considered more humane than a non-lethal technique that has a high probability of causing prolonged suffering.

Evaluate effectiveness.

While other factors are important, if the animal is not removed, the problem is not solved.

Be sure it's practical.

Methods that are humane, effective, and safe will not be implemented if they are too expensive or otherwise cumbersome for the owner of the building.

Be aware of the social context.

Human responses to animals are diverse and often intense. It is important to consider the visibility of the animal removal and choose techniques that will help maintain positive relationships with the building's occupants and the broader community.

Legal Considerations

The following is a summation of the legal framework for wild animal control in New York State. The major regulatory agencies for wild animals in New York are the New York State Department of Environmental Conservation (all species) and the U.S. Fish and Wildlife Service (migratory birds and federally endangered species). Contact your local office of the Department of Environmental Conservation (or the appropriate agency in other states) with any specific questions or concerns that you may have.

Every species of wild animal in New York State has a legal classification. The classification categories of most relevance to pest management are "unprotected" and "protected."

An **"unprotected"** species can be captured and removed legally without a permit at any time of the year and by any means provided other laws are not violated (i.e., pesticide regulations, firearm discharge ordinances, trespassing laws, etc.). "Unprotected" mammals include shrews, bats (except the Indiana bat, which is federally protected), eastern chipmunk, woodchuck, red squirrel, flying squirrels, mice, and Norway rat. The rock dove (feral pigeon), house sparrow, and European starling are "unprotected" bird species. Most snake species are "unprotected."

Most **"protected"** mammal species fall under the sub-category of **"protected/general permit."** For these species, an individual animal can be captured and/or destroyed by the property owner if it is causing damage. However, the animal (dead or alive) cannot be taken off the landowner's property without a nuisance wildlife control permit. Exceptions are made for animals taken during a legal hunting or trapping season established for that particular species, provided the appropriate hunting/trapping license has been obtained.

In addition, **"blanket"** nuisance wildlife control permits are issued to individuals who have gone through the prescribed application process. These general permits, which must be renewed annually, allow the removal of "protected" animals in any number, at any time, and from any location (with the landowner's permission) within the state. Examples of individuals who may have obtained a "general" permit include private nuisance wildlife control operators, many pest control operators, municipal animal control officers, and some wildlife rehabilitators. Mammalian species that are classified under this "protected/general permit" category, include the opossum, raccoon, grey squirrel, weasels, and skunks.

A few mammals, snakes (such as the eastern massasauga rattlesnake, timber rattlesnake, and queen snake) and most birds are not only "protected" but cannot be captured and/or removed from property without special case-by-case permits. The general "blanket" nuisance wildlife control permits do not authorize the removal of these species. With the possible exception of woodpeckers and gulls, these species would rarely cause problems in buildings.

There are various complications associated with these regulations. For example, an "unprotected" animal can be captured, possessed, and transported without a permit; however, a state permit is required to release an animal off your property. Additionally, local municipalities may require a permit for pigeon control. State and county health departments have authority over species that may carry rabies. As stated previously, contact the Department of Environmental Conservation if you have questions about the law and wild animal problems.

Animal Removal Techniques

Below are descriptions of some of the legal methods commonly used to remove animals that enter buildings in New York State. Generally, a combination of methods will give better results than any one approach by itself. A list of suppliers and manufacturers is provided in Appendix D.

Traps

Live traps capture animals without killing them. Some types of live traps are box traps, multiple capture traps, and a variety of bird traps. By definition, foothold traps (commonly used in fur trapping) are live traps. However, foothold traps generally are not practical for removing animals from buildings.

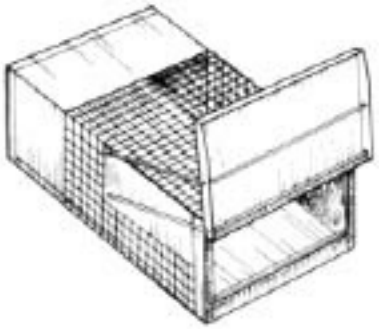

Box traps capture animals that step upon a treadle inside the trap. The tripped treadle results in the closing of a door(s) at the end(s) of the trap. Many designs and sizes of box traps are available, especially for the capture of mammals. Usually the animal is enticed into the trap by a bait or lure. Some models with doors on opposite ends of the trap can capture animals that are simply passing through.

Multiple capture traps are able to catch more than one animal without having to be reset. Most multiple capture traps are designed for mice. Some brands (such as Ketch-All®) will catch animals up to the size of chipmunks. However, larger animals are more likely to suffer harm. Some designs (such as Ketch-All® and Kwick Katch®) have a wind-up spring that powers a rotating mechanism. When triggered, the mechanism entraps mice in a holding compartment. Other traps (notably the Victor Tin Cat®) have one-way doors that allow mice to enter but not exit.

Bird live traps are available in many varieties. Most are designed to capture particular types of birds, such as pigeons or sparrows. Some will capture one bird at a time, while others are multiple capture traps.

Lethal traps kill an animal upon capture, usually by means of a mechanical blow. The best known examples are mouse-and rat snap-back traps. Other designs and sizes exist for capturing a wide range of animals, especially mammals. One example is the ConibearTM, body gripping trap. Exercise extra caution when determining when and where lethal traps are set.

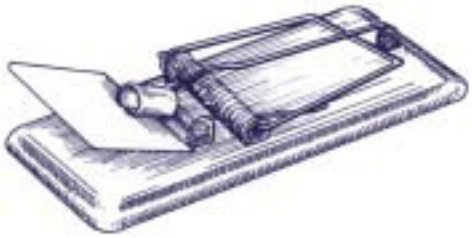

Glue boards or traps consist of a layer of long-lasting adhesive spread over a surface (usually plastic or cardboard). They effectively capture small animals by entrapping them in adhesive. If the animal is removed soon after capture, a glue board functions as a live trap. The animal can be removed by loosening the adhesive with vegetable oil. In practice, however, animals are frequently left to die on the glue boards. Thus, many people consider glueboards to be inhumane.

Passive nets are set in a location and left for a period of time. Animals are captured when they encounter the net and become entangled. Fine-threaded nets, known as mist nets, are often used to capture birds inside buildings.

Direct Capture

There are several types of equipment used to facilitate the capture of animals without the use of traps.

Animal handling gloves. Various specialized gloves exist to protect operators while they are capturing an animal. The best designs cover not only the hand but also a portion of the arm. They are usually made of thick leather and may contain other materials, such as KevlarTM (from which bulletproof vests are made).

Hand-operated devices. Among the most versatile of hand-operated devices are catchpoles (control loops) that tighten a looped cable around the body of an animal. Other devices utilize vise-grip mechanisms to capture and restrain animals.

Nets also can be used for direct capture. Two designs are the throw net and "hoop" net. Throw nets are tossed over the target animal. "Hoop" nets (such as fish landing nets) are attached to the end of a long handle.

Repellents

Visual. There are many types of visual repellents for birds. They range in price and sophistication from simple inflatable plastic balls with large eyespots to mechanical human effigies. The repellent effect is generally immediate but short term. Movement of the devices increases effectiveness, especially if the movement is unpredictable or irregular.

Auditory. There are many types of auditory repellents for birds. The most effective are devices that play distress calls of the target species. Other types of auditory repellents utilize loud noises to startle the target. One example is a "shell cracker," a projectile (fired from a shotgun) that explodes in the air. Devices that claim to repel animals by use of ultrasonic waves not audible to humans have consistently proven to be ineffective.

Taste. Most bad-tasting repellents have been developed to deter deer or geese from damaging garden plants or lawns. Few taste repellents have been specifically designed for use on buildings. BitrexTM, one such substance, may help prevent chewing damage on the sides of buildings.

Olfactory. Products containing substances such as naphthalene or dried blood are known to have a repellent effect, particularly on mammals. These products are generally labeled for outdoor use and may be useful in helping to drive animals out from under decks or other structural additions.

Contact (Touch). Several repellents, containing polybutenes, form an adhesive surface that is uncomfortable for pigeons and other birds. At least one of these products is registered for squirrels.

Firearms

Shotguns and .22 caliber rifles/pistols can sometimes be used to remove animals from the outside of structures. Inside large buildings, such as warehouses, pellet guns have been successfully used to remove pest birds. Firearms should be used only by individuals who have been trained in firearm safety. Legal restrictions, such as local firearm discharge ordinances, also restrict their use.

Disposing of Captured Animals

There are several options for disposing of an animal once it has been captured directly or with the use of live traps.

Releasing the captured animal just outside the building results in the least stress on the animal. This is most practical when an animal has incidentally entered the structure and there is little risk to humans in having the animal in the general vicinity of the building. A squirrel or bird that has fallen down a chimney is a good example. Releasing on-site is not a good idea if the presence of the animal (e.g., a Norway rat) involves significant health or safety risks. Combine on-site release with effective exclusion techniques to prevent the animal from reentering the building.

Relocation of a captured animal is a common but controversial technique. While solving some of the problems associated with releasing the animal on-site, there are legal and biological concerns with this practice. In New York State, moving a "protected" animal off property requires a nuisance wildlife control permit. You must also adhere to any trespass laws at the release site. Some specialists question the wisdom of relocating animals. There is evidence that stress and mortality rates increase when animals are released in unfamiliar territory. Relocated animals may harm resident animals (e.g., by fighting, disease transmission, gene pool disruptions, etc.) or cause problems for humans in the vicinity of the release site.

Euthanasia is a third option. By definition, euthanasia (or "good death") is more than simply killing the animal. The American Veterinary Medical Association's 1993 Report on Euthanasia, while dealing primarily with domestic animals, offers the most widely accepted guidelines for euthanasia practices.

One-Way Doors

These devices, either commercially available or homemade, allow an animal to exit but not reenter a building. Effective bat-proofing often involves the use of such doors, also known as checkvalves. Tomahawk manufactures one-way doors for squirrels.

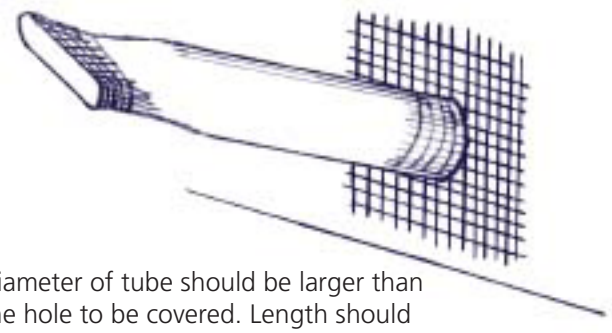

Diameter of tube should be larger than the hole to be covered. Length should be longer than 8 inches.

William Bridgeland, a wildlife consultant, has developed a one-way door technique for snakes. Aluminum insect screening is rolled into a tube and attached over the entry hole, which is usually around the foundation. The tube is angled slightly up and somewhat flattened at its outer end. The snake should be able to crawl out of the tube but not reenter. Insect screening is used because snakes may utilize olfactory clues to find entry holes. Insect screening would diffuse odors and be less likely to direct the animal to the open end of the tube when seeking reentry. When snakes are active (during the summer), the tube should remain in place at least two weeks.

One-way doors are only effective if the animal can find and use the exit and cannot force its way through the door or find another entry point.

Dogs

Some specialists use certain breeds of dogs (such as the Russell terrier) to help capture an individual animal within structures. This approach can be very effective, but the dogs must be well trained and under careful supervision.

Pesticides

Outside your own home, the application of a pesticide (and legally registered chemical repellents) requires the appropriate pesticide applicator's permit. There are relatively few pesticides available for the control of animals.

Rodenticides. The largest variety of available rodenticides is for commensal rodent control (house mouse, Norway rat). There are two categories of rodenticides: anticoagulants and acute toxicants.

Anticoagulants are slow to take effect and usually require more doses than acute toxicants. With a slower reaction time and vitamin K as an antidote, the risk of accidental poisoning of non-target animals and humans is considered lower than for acute toxicants. However, some of the anticoagulants (such as brodifacoum) have a higher risk of secondary poisoning due to their toxicity at low levels. Secondary poisoning, the poisoning of a predator or scavenger that eats a poisoned rodent, is an important consideration. Also, some populations of commensal rodents have developed resistance to certain anticoagulants.

Acute toxicants are effective with as few as one feeding. Physiological resistance has not been demonstrated, but individual animals may become "bait shy" if they survive the initial exposure. While the risk of secondary poisoning is usually considered to be lower than with anticoagulants, the danger of accidental direct poisoning may be higher.

Fumigants. Use of fumigants is most practical for killing rodents in burrows around the outsides of buildings. Fumigants such as aluminum phosphide and gas cartridges are registered in New York State for use on Norway rats, woodchucks, and chipmunks. When fumigating burrows that are near buildings, you must ensure that the gas does not enter the building. Gas cartridges can also be a potential fire hazard.

Avitrol® baits are poisons with flock-alarming properties. The baits are registered as chemical frightening agents (repellents) for use on pigeons, house sparrows, starlings, and other species. Birds that have fed upon the bait exhibit distress behavior that frightens the rest of the flock away. Although true secondary poisoning does not

occur, the product remains toxic to any bird that eats it even once it is in a bird's digestive tract. The possibility of a negative public reaction to dying birds should be considered when planning a bird control program using Avitrol®.

Immobilizing Agents

Immobilizing agents (such as Ketamine HCl and xylazine HCl) are heavily regulated by federal and state agencies and, therefore, are not readily available to most pest control operators or the general public. Although they are occasionally helpful for removing an individual animal, they are generally not practical for most animal problems.

Excluding Animals

Before Excluding an Animal

The best way to avoid problems with animals in your home, school or office is to prevent them from entering in the first place. Raccoons, woodchucks, bats, mice, and snakes can do considerable damage once they find a way into your building. This section offers some options for animal-proofing or excluding animals from buildings. (Products mentioned throughout this section are provided as examples and do not constitute an endorsement on the part of the New York State IPM Program, Cornell Cooperative Extension, or Cornell University.)

Is it in or out?

Before closing animal entry sites in a building, be certain that animals will not be trapped inside. If you are uncertain whether an entry site is active, monitor it for at least two days. Placing newspaper in the hole, stapling cardboard over the hole, or placing duct tape over the hole works well. Animals that currently inhabit the building usually will need to be removed before proceeding with exclusion.

Time of year.

In winter, many animals (e.g., woodchucks, raccoons, chipmunks) are inactive for long periods. You may think that an entry hole is inactive only to be unpleasantly surprised in the spring or during a warm spell. Snow and ice also make it difficult to safely work on the outside of a building.

Watch for little ones!

During the spring and summer, the presence of young animals can complicate exclusion. Listen for sounds (such as high-pitched squealing or chirping) of the young in walls, fireplaces, etc. Another sign, if you can get close enough, are the teats of female mammals: they will usually appear enlarged and bare of hair when nursing. Although it is generally not illegal in New York State to remove young animals from buildings, special consideration should be given as to when and how it is done.

Keep it legal.

Building codes, fire codes, and other ordinances are important to keep in mind when deciding how to exclude animals. For example, many homemade chimney covers do not meet legal safety requirements.

Does it work?

The durability and effectiveness of a technique varies by species and situation. To illustrate, bats are generally not able to chew or claw their way through most exclusion materials. However, they are often persistent in finding small, over-looked holes. Raccoons and rodents, on the other hand, are capable of removing insufficient exclusion or opening new holes into a structure. Be sure your methods are appropriate to your situation.

How does it look?

Keeping aesthetics in mind, choose options that do not detract from the looks of the building. Efficacy, however, should not be sacrificed for attractiveness. Replacing damaged woodwork in a vulnerable location may look better without a metal covering but animals may quickly damage the wood again. Painting the metal can improve its appearance and keep the animals out.

Exclusion Materials and Procedures

Start Simple!

Reducing an animal's access to the structure can diminish future problems significantly. Trim trees back from the roof. Remove thick vegetation, debris, and firewood piles from near the foundation. Install barriers on transmission lines (check with your local utility company first!) to reduce squirrels' access to the building. Eliminate nearby food supplies: pet food, garbage, compost, and bird seed, should be kept in locations or containers that are not accessible to problem animals.

Seal Structural Openings

You can use a variety of materials to close structural openings used by animals.

Galvanized sheet metal is durable and, when attached with screws, resistant to removal by raccoons and other animals. It can, however, be difficult to bend and fit unobtrusively around corners.

Galvanized metal mesh (known as hardware cloth) shapes more easily than sheet metal and is reasonably durable. Hardware cloth is generally available in quarter-inch and half-inch mesh sizes. Half-inch hardware cloth is stronger but less flexible than quarter-inch. Quarter-inch is also more appropriate for smaller vertebrates, such as mice and bats. Hardware cloth is frequently used to prevent animals from going underneath the parts of buildings that lack foundations. The hardware cloth, or other appropriate fencing material, is attached to the bottom of the structure and buried into the ground. In general, the barrier fence (often referred to as a "rat wall") should be buried one foot deep with a six-inch horizontal shelf at the bottom. The shelf will help prevent animals from digging underneath the barrier.

Stainless steel hardware cloth is stronger than galvanized and will never rust. The disadvantages of stainless steel are that it is significantly more expensive and it is more difficult to cut and shape.

Aluminum flashing is malleable and relatively easy to shape around corners. It is most appropriate for bird exclusion since raccoons and rodents can usually chew or claw through it.

Caulk, sealant (for movable joints), copper gauze (such as Stuff- It®), and foam insulation can be used to seal cracks and other small openings.

Protect Vents

Animals frequently enter structures through vents. Replace damaged and vulnerable vents with designs that are more resistant to animal entry.

Tools

General carpentry tools are sufficient for most exclusion projects. These include hammers, staple guns, screwdrivers, caulking guns, pliers, tin snips, safety goggles, etc. Some special tools are also helpful.

Power drills. Keep two drills available in case the battery runs low in one. Two drills can also speed up work if you keep different bits in each drill. For example, if you are drilling holes through sheet metal and then attaching the metal to the building with screws, one drill can be used to drill the holes while the second can be used to drive the screws.

Foam gun. Particularly useful in bat exclusion, a foam gun (such as the Todol® system) cleanly and quickly sprays expanding foam insulation into structural cavities and cracks.

Roof vents (or louvers) should be either metal or heavy-duty plastic. The best models are totally enclosed to prevent birds and rodents from nesting inside the vent.

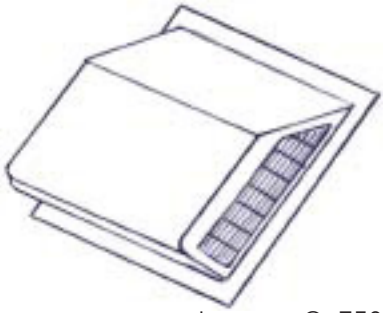

Lomanco® 750

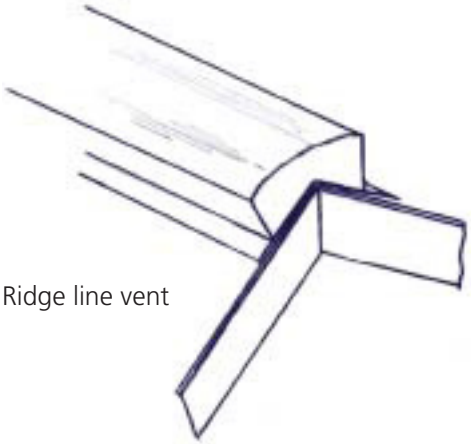

Ridge line vent

Ridge line vents come with end caps that frequently work loose. This allows small animals such as sparrows, mice, and bats to easily access attics. Replacement caps (either purchased or homemade) will secure these vents.

Ventilation openings in soffits (under eaves) are frequently used as entry sites by a wide range of animals from house sparrows to raccoons. These openings are best protected by metal louvers securely attached to the soffit.

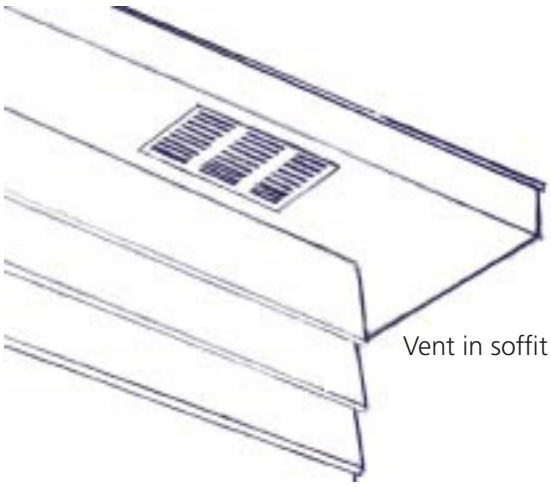

Vent in soffit

Plastic gable louvers on the sides of buildings should be replaced with metal gable louvers. The gaps between individual louver slats should be narrow enough that birds cannot nest in them. Screening on the back of the vent also needs to be intact to keep bats and insects out of the attic.

Clothes dryer vents often offer an entry way to small animals. Be careful when screening these vents because a buildup of clothes lint will damage the dryer. Screens need to be cleaned frequently or the vents can be replaced with models that are designed to exclude animals without lint clogging.

Sewer vent pipes should be covered with commercial shields to prevent rodents and birds from entering the pipes.

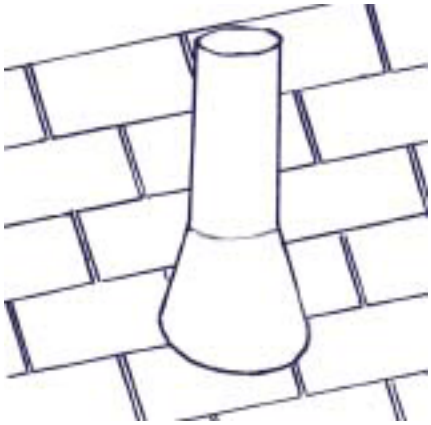

Vent pipe shield

Some vents can be modified with home-made screens. Examples include quarter-inch hardware cloth around kitchen hood vents and hardware cloth aprons inside the covers of attic fans venting through the roof.

Cover the Chimney

Raccoons, squirrels, bats, many birds, or any animal that dens or nests in cavities, will sometimes descend chimney flues. Entry can be prevented by the use of chimney covers. Commercially produced covers will meet the ventilation safety requirements of fire codes.

Many chimney cover designs attach to a single tile flue liner. These generally bolt to the outside of the tile liner or have legs that slip inside the flue.

Covers, that slip inside the tile liner prevent squirrel and bird access. Raccoons can usually remove these covers, and designs that bolt to the side of the flue are better if raccoons are a problem. Models with the smallest openings that meet fire codes are best for bat exclusion.

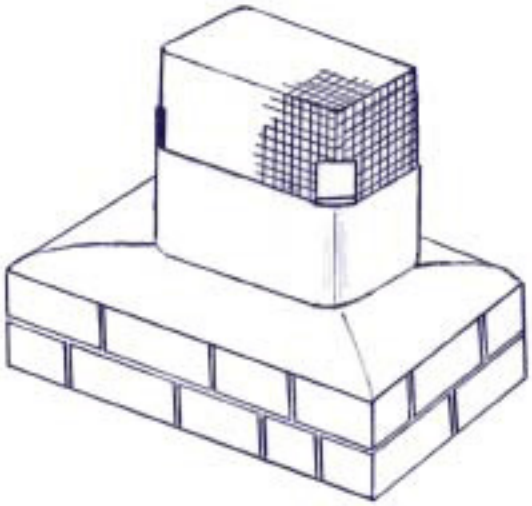

Cover that slips inside the liner

Other chimney covers attach to or around the crown (top) of the chimney. These covers are particularly helpful if there are several flues per chimney or there are no tile liners extending through the crown.

There are commercial covers designed to fit metal chimneys and these will keep out animals. If installed carefully, many metal chimney tops can also be enclosed with half-inch hardware cloth. Make sure any covering meets fire code requirements.

Several chimney cover manufacturers are able to custom fit covers for unusual chimneys. Call the manufacturer to find out what chimney measurements are needed. Custom-made covers are usually more expensive than mass-produced, standard covers.

Most chimney covers are made of stainless steel or galvanized steel. Others are made of copper or aluminum. Some designs function both as a cover and a damper.

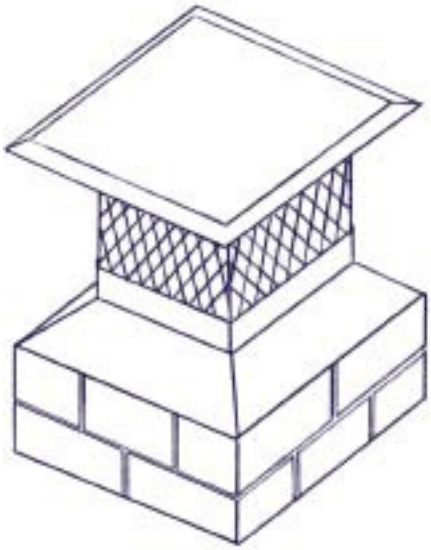

Cover that attaches outside the liner

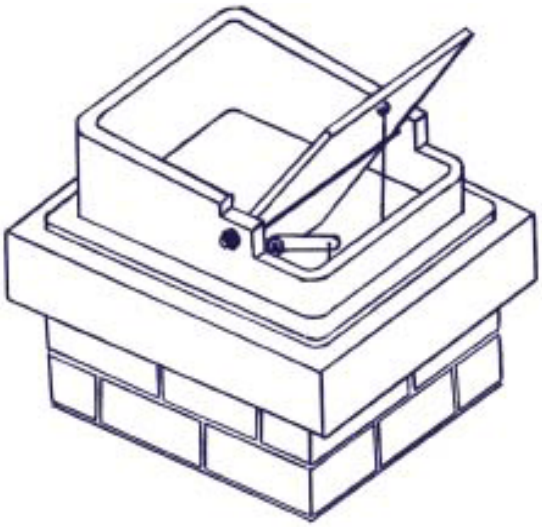

Chimney cover with damper

For the Birds

A wide range of specialized products for bird exclusion have been developed, and new products and accessories come on the market frequently. Most products fall under the following categories.

Netting is often used to deny birds access to alcoves and other spaces. Bird netting is made from a variety of materials (including polyethylene twine and extruded polypropylene) and in a range of grid sizes and strand width. Specialized hardware is also available for attaching netting to different substrates.

Metal or plastic spikes, such as Catclaw®, Bird-B-Gone®, ECOPIC®, and Nixalite®, help prevent birds from roosting at specific locations. Metal coils (e.g., Bird Barrier®) function similarly.

"Post-and-wire" technology uses stainless steel wires or thin cables arranged in parallel lines. This method is especially effective for pigeon exclusion. Parallel 80+ pound test monofilament lines also work well.

Electrified systems (Avi-Away®, Flock-Shock®, Flyaway®, VRS®) are designed to shock birds without killing them and thus exclude them from specific locations. The cost of installing these systems is often high, but the systems generally have a long working life.

Heavy plastic or rubber strips suspended in large open doorways can help prevent bird access. People and machinery are still able to move through the strips.

Appendix A: Animal Identification

Raccoon

Relatively large (10 to 30 lb.) with distinctive black "mask" and ringed tail. Mostly, but not exclusively, nocturnal. Frequent invader of attics, chimneys, and under decks. Occasionally found in wall voids and crawl spaces.

Access Routes

Trees adjacent to or overhanging roofs; downspouts; fire escapes; corners of structures (if siding allows climbing); brick chimneys.

Entry Sites

Vents (such as roof, soffit, gable, fan); uncovered chimneys; deteriorated roofs or eaves; open decks and underneath structural additions.

Sounds

Adults: growls, soft grunts; juveniles: loud, bird-like chattering. Heavy walking in attics.

Fecal Droppings

Variable in appearance and size. Often dog-like. Seeds and fruit parts may be obvious. Often accumulate in regularly used "toilet" sites on roofs and in attics.

Odor

Distinctive and recognizable with experience.

Hair

Back and sides of animal, 1 to 2 inches long: each hair partitioned into dark/light/dark sections.

Belly: light colored.

Tail: light (may have reddish cast) or dark.

Other Signs

Claw marks especially at climbing locations and around entry holes.

"Grubbing" (digging up turf for grubs and other food).

Raccoon tracks: Front: 3 in. Back: 3 1/2 in.

Gray Squirrel

Slender, weighing 1 to 2 lb., with a long bushy tail. Typically grayish with a reddish cast, white belly, and white-tipped hairs on border of tail. Black and lighter-than-typical coats can occur. Diurnal (active during day). Frequent invader of attics, wall voids, and miscellaneous crawl spaces. Often becomes trapped in chimneys and enters human living spaces, especially basements, via chimneys.

Access Routes

Trees and branches within ten feet of the roof; electrical utility lines; fire escapes; certain types of siding; brick chimneys; downspouts (occasionally).

Entry Sites

Usually high on the building; holes in fascia boards of eaves, dormer tie-ins, architectural returns, and similar sites along the roof line; vents (roof, soffit, gable, fan); uncovered chimneys; deteriorated roofs, eaves, and walls.

Sounds

Chattering; short "barks." Scampering; gnawing.

Gnaw Marks and Food Remains

Gnaw marks on wood, plastic, etc. Chewed-open nut shells.

Fecal Droppings

Usually 1/4 to 1/2 inch long, granular, and oval. Vantassel describes as "black piece of rice" or "enlarged brown BB pellet." Generally scattered rather than accumulated in "toilets."

Hair

Except tail, 1/2 to 1 inch long. Back and sides of animal: gray may be tipped with reddish-brown. Belly: white. Tail: 2 to 3 inches; each hair partitioned into reddish-brown, black, white (tip) segments.

Other Signs

Body rub marks at entry sites. Runways in attic insulation. Aluminum surfaces (e.g., gutters) may have claw marks.

Gray squirrel tracks
Front: 1 in. Hind: 2 1/4 in.

Red Squirrel

Small (less than 1 lb.), reddish brown above and white below. Often a black stripe separates the two colors. Diurnal (active during day). Frequent invader of attics, wall voids, and miscellaneous crawl spaces. Also can become trapped in chimneys.

Access Routes

Trees and branches within 10 feet of the roof; electrical utility lines; fire escapes; certain types of siding; brick chimneys; downspouts (occasionally).

Entry Sites

Usually high on the building; holes in fascia boards of eaves, dormer tie-ins, architectural returns, and similar sites along the roof line; vents (roof, soffit, gable, fan); uncovered chimneys; deteriorated roofs, eaves, and walls. Will also enter holes near the foundation and crawl spaces and wall voids via attached garages. Entry holes can be smaller and more difficult to find than those of the gray squirrel.

Sounds

Very vocal; distinctive calls; diverse repertoire includes chatters and clucking sounds and pitch is higher than that of gray squirrel. Scampering; gnawing.

Gnaw Marks and Food Remains

Gnaw marks on wood, plastic, etc. Chewed-open nut shells. Food caches (cones, seeds, nuts).

Fecal Droppings

Usually 1/4 to 3/4 inch long and elongated. Tend to be smaller in diameter, but often longer, than gray squirrel's. Generally scattered rather than accumulated in "toilets."

Hair

Except tail, approximately 1/2 inch long. Back and sides of animal: tipped with reddish-yellow. Belly: white. Tail: approximately 3/4 inch long; each hair partitioned into red, black, yellow (tip) segments.

Other Signs

Body rub marks at entry sites. Runways in attic insulation.

Red squirrel tracks
Front: 3/4 in. Hind: 1 1/2 in.

Flying Squirrel

Small (less than 7 oz.) tree squirrel. Olive-brown above, white below. Distinctive gliding skin flap stretching from front leg to rear leg. Flattened tail. Nocturnal. Invader of attics, wall voids, and crawl spaces. Frequency varies regionally. Also can become trapped in chimneys.

Access Routes

Tall trees within gliding distance of roof.

Entry Sites

Usually high on the building; holes in fascia boards of the eaves, dormer tie-ins, architectural returns, and similar sites along the roof line; vents (roof, soffit, gable, fan); uncovered chimneys; deteriorated roofs, eaves, and walls. Holes are often smaller than those of the gray squirrel.

Sounds

High pitched twitters. "Landing" noises at night. Scampering; gnawing.

Gnaw Marks and Food Remains

Gnaw marks on wood, plastic, nutshells, etc. Caches some food (such as seeds and nuts) in nests and tree crotches.

Fecal Droppings

Variable, but tend to be elongated and 1/4 to 1/2 inch long. Similar to red squirrel except smaller. Brownish stains often associated with feces and urine accumulations.

Hair

Except tail, 1/4 to 1/2 inch long. Back and sides of animal: black-tipped with light brown. Belly: white or black with white tip; may have reddish cast. Tail: 1/2 to 3/4 inch long. Back of tail: light brown. Bottom of tail: light reddish.

Other Signs

Body rub marks around entry holes. Runways in attic insulation.

Tracks

Landing marks.

Eastern Chipmunk

Small (about 3 oz.) predominantly ground-dwelling squirrel. Brownish with several longitudinal black and tan stripes and a reddish rump. Tail is furred but not bushy. Diurnal (active during day). Frequent invader of basements, wall voids, attics, and crawl spaces. Also can become trapped in chimneys.

Access Routes

Trees and bushes close to structure; certain types of siding; brick chimneys.

Entry Sites

Similar to red squirrel except that more frequently enters near the foundation than higher on the structure. Commonly enters basements through dryer vents and accesses crawl spaces and wall voids via attached garages. Check holes in fascia boards of eaves, dormer tie-ins, architectural returns, and similar sites along the roof line; vents (roof, soffit, gable, fan); uncovered chimneys; deteriorated roofs, eaves, and walls. Entry holes can be small and difficult to find.

Sounds

Clucking; high pitched alarm chatters. Scampering; gnawing.

Gnaw Marks and Food Remains

Gnaw marks on wood, plastic, nut shells, etc. Food caches (such as seeds and nuts) in burrows/dens.

Fecal Droppings

Similar to mice but often larger (about 1/4 inch long or more): dark, elongated, hard.

Hair

Except for tail, approximately 1/4 inch long. Back and sides of animal: varies in colorgray, black, reddish, whitish.

Belly: white.

Tail: each hair partitioned into reddish, black, white (tip) segments; approximately 1/2 inch long.

Other Signs

Body rub marks at entry holes. Runways in insulation.

Eastern chipmunk tracks
Front: less than 1 in. Hind: 1 7/8 in.

House Mouse

Small (less than 1 oz.) slender grayish brown rodent with a largely hairless tail. Largely (but not exclusively) nocturnal. Frequent invader of basements, wall void, attics, crawl spaces, and human living spaces of buildings. Particularly common in urban areas.

Access Routes

Physical cover near the foundation can facilitate access; check firewood stacks, debris piles, and crawl spaces under decks or additions.

Entry Sites

Holes larger than 1/4 inch, usually in vicinity of foundation.

Sounds

Squeaking. Scampering; gnawing.

Gnaw Marks and Food Remains

Gnaw marks on wood, plastic, etc.

Fecal Droppings

Dark, elongated, hard; about 1/8 to 1/4 inch long. Most frequent in areas of most mouse activity.

Odor

Musky.

Hair

White to gray; 1/8 to 1/4 inch long.

Other Signs

Urinary "pillars" (small mounds of grease, urine, and dirt). Body rub marks around entry sites and along runways. Runways in insulation. Nests (generally loosely woven balls of shredded fibrous material). Urine stains (under UV light).

House mouse tracks:
Front: 1/4 in.
Hind: 3/8 in

Norway Rat

Stocky (approximately 1 lb.), grayish brown, with a long, rather hairless tail. Largely (but not exclusively) nocturnal. Frequent invader of basements, wall voids, attics, crawl spaces, and human living spaces of buildings.

Access Routes

Physical cover near the foundation can facilitate access; check firewood stacks, debris piles, and crawl spaces under decks or additions.

Entry Sites

Holes larger than 1/2 inch, usually in vicinity of foundation. Also accesses crawl spaces and wall voids via attached garages.

Sounds

Squeaking. Scampering; gnawing.

Gnaw Marks and Food Remains

Gnaw marks on wood, plastic, etc.

Odor

Not as musky as house mouse.

Hair

Back and sides of animal: each hair partitioned into black, gray, black segments; 1/2 to 3/4 inch long.

Belly: white to gray, approximately 1/8 inch long.

Fecal Droppings

Dark, elongated; 1/2 to 3/4 inch long.

Other Signs

Body rub marks around entry sites and along runways. Runways in attic insulation. Burrows in ground near foundation and dirt floors of basements.

Nests (may be lined with shredded fibrous material). Urine stains (under UV light)

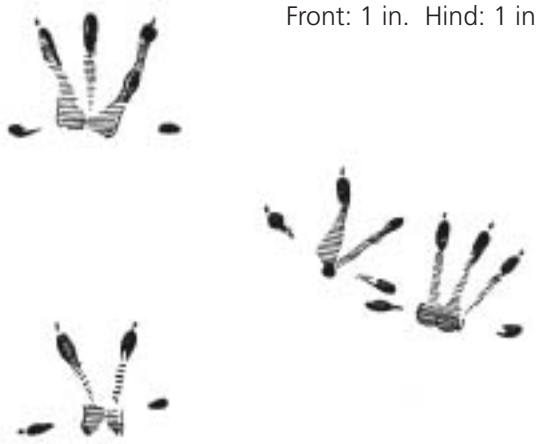

Norway rat tracks
Front: 1 in. Hind: 1 in.

White-footed Mouse and Deer Mouse

Small (approximately 1 oz.), with relatively large ears and eyes. Bicolored, including tail: upper parts are brownish, lower parts are white. Tail long and furred. Largely nocturnal. Frequent invaders of basements, attics, wall voids, and miscellaneous crawl spaces. Particularly common in rural and suburban situations.

Access Routes

Trees and bushes adjacent to the structure; certain types of siding; brick chimneys. Physical cover near the foundation can facilitate access; check firewood stacks, debris piles, and crawl spaces under decks or additions.

Entry Sites

Holes larger than 1/4 inch in locations similar to red squirrel and Eastern chipmunk. Check holes in fascia boards of eaves, dormer tie-ins, architectural returns, and similar sites along the roof line; vents (roof, soffit, gable, fan); uncovered chimneys; deteriorated roofs, eaves, and walls. Often gains access to crawl spaces and wall voids via attached garages. The white-footed mouse, particularly, is a good climber and often enters high on a building.

Sounds

Squeaking. Scampering; gnawing.

Gnaw Marks and Food Remains

Gnaw marks on wood, plastic, nut shells, etc. Food caches (the white-footed mouse in particular will rob traps set for larger animals and cache the food).

Fecal Droppings

Dark, elongated, hard; about 1/8 to 1/4 inch long. Similar to house mouse droppings.

Odor

Lacks musky odor of house mouse.

Hair

Back and sides of animal: brown to reddish brown, black tipped, 1/4 to 1/2 inch long.

Belly: each hair partitioned into black and white segments, 1/8 to 1/4 inch long.

Other Signs

Body rub marks around entry sites. Runways in attic insulation. Nests made up of fibrous materials and lined with fine materials such as fur, feathers, or shredded cloth.

White-footed or deer mouse tracks
Front: 1/4 in. Hind: 5/8 in

Woodchuck

Relatively large (5 to 10 lb.), chunky. Color variable but generally grizzled brownish gray. Diurnal (active during day). Largely ground dwelling but capable of climbing. Frequent burrower near foundations and under decks and additions. Occasional invader of basements if foundation has deteriorated. Rarely enters crawl spaces or other wall voids in structures.

Access Routes

Open crawl spaces/voids under decks and additions can facilitate access.

Entry Sites

When enters a structure, usually via a deteriorated foundation.

Sounds

Whistles and clucking when alarmed.

Gnaw Marks and Food Remains

Gnaw marks on decks, trees, and other wood.

Fecal Droppings

Variable; tend to be bulky and "dog-like."

Hair

Back and sides of animal: each hair partitioned into dark, light, dark, light (tip) segments; may have reddish cast; 1 to 2 inches long.

Belly: each hair partitioned into dark, light (with reddish cast) segments; approximately 1 inch long.

Tail: dark, may have reddish cast; 2 to 2 1/2 inches long.

Other Signs

Burrows often have a large mound of excavated dirt at the entrance.

Woodchuck tracks:
Front: 2 1/8 in. Hind: 2 1/2 in.

Striped Skunk

Cat-sized (approximately 8 lb.), with distinctive black fur and prominent longitudinal white stripes. Variability in the size of the stripes; some individuals appear almost white from above. Largely nocturnal. Frequent invader under decks and beneath additions. Occasionally enters basements through open windows or deteriorated foundations.

Access Routes

Open crawl spaces and voids underneath decks and additions can facilitate access.

Entry Sites

Usually enters a structure via deteriorated foundations, open windows, or foundation vents.

Sounds

Thumping made by stamping of feet when agitated. Chattering when frightened.

Fecal Droppings

"Cat-like;" usually 2 to 4 inches long and less than an inch in diameter.

Odor

Distinctive, penetrating, and long lasting.

Hair

Black or white; 1 to 2 1/2 inches long.

Other Signs

Burrowing; "grubbing" (digging up turf for grubs and other food).

Striped skunk tracks
Front: 1 - 1 3/4 in.
Hind: 1 1/2 - 2 in.

Weasels

Predatory mammals with long slender bodies, short legs, and rounded ears. Depending on species, weight ranges from 2 1/2 oz. to 12 oz. In summer, fur is brown above and white below. In winter, the fur is all white. In two larger species, the tail is black tipped year round. Occasional invaders of basements, wall voids, and human living spaces. May be hunting rodents.

Access Routes

Physical cover (vegetation, piles of firewood or debris, openings underneath decks and additions) can facilitate access.

Entry Sites

Usually openings around foundation.

Sounds

High-pitched shrieks.

Gnaw Marks and Food Remains

Food caches (mouse carcasses)

Fecal Droppings

Dark, long, and slender; containing fur/bones/feathers.

Odor

Pungent

Hair

Length: 1/4 to 1/2 inch

Summer

Back and sides of animal: light brown.

Belly: white with yellowish cast.

Tail: varies brown to black.

Winter

Back and sides, belly: white; may have yellowish cast.

Tail: some hairs may be dark.

Weasel tracks
Front: 1/2 as long as hind
Hind: 1 in.

Bats

Small (usually less than 1 oz.), dark, flying mammals. Nocturnal. Frequent invader of attics and wall voids. Occasionally enter basements and human living spaces.

Access Routes

Since bats are flying animals, no specific access routes (besides a relatively clear flight lane) are needed.

Entry Sites

Usually on the upper portion of the structure. Any opening larger than a 1/4 inch has potential as an entry site. Common locations include roof drip edges, dormer tie-ins, roof corners, chimneys, vents, deteriorated roofs, walls, and eaves.

Sounds

High-pitched, rapid clicking. Scratching in walls, attics, etc. Fecal Droppings

Dark, elongated, granular, 1/4 to 1/2 inches long, crumbles into dust (actually insect parts) when rubbed between two fingers. Often confused with mouse droppings, which are more tapered at the ends and hard (won't crumble).

Odor

Distinctive, acrid, musty odor (from large colonies in particular).

Hair

Dark, brown, or gray; 1/8 to 1/4 inch long.

Other Signs

Urine stains; body rub marks (especially at heavily used entry sites).

Short-tailed Shrew

Small (less than 1 oz.) mammal with an elongated snout, dense lead-colored fur, small eyes, and no external ears. Active day and night. Occasional invader of basements, wall voids, attics, and miscellaneous crawl spaces.

Access Routes

Physical cover near the foundation can facilitate access; check firewood stacks, debris piles, and crawl spaces under decks or additions. Trees and bushes adjacent to buildings might also be used.

Entry Sites

Usually small openings around the foundation. Possibly openings around roofline are also used.

Sounds

Squeaking.

Fecal Droppings

Dark, elongated, granular, up to 1 inch long, often in piles and cork-screw shaped.

Odor

Pungent.

Hair

Gray; 1/8 to 1/4 inch long.

Shrew tracks:
Front: 1/4 in.
Hind: 1/4 in.

House sparrow

Small (less than 3 oz.) brown, chunky. Male has a black throat and white cheeks; the top of the head is gray flanked with chestnut. Female is dingy brown. Both sexes have a striped back. Diurnal (active during day). Frequent invader of attics, eaves, vents, and miscellaneous openings.

Access Routes

Any place with an open flight lane.

Entry Sites

Vents (roof, soffit, gable, bathroom, kitchen stove hood); any openings large enough on the outside of the structure; will also bYuild nests on the exterior of structures.

Sounds

Monotonous musical chirping; chattering.

Fecal Droppings

"White wash."

Other Signs

Nests (bulky, roofed accumulation of grass and similar fibrous materials) located in holes, cavities, and on sides of buildings.

European Starling

Short-tailed, black, weighing about 3 oz. Plumage may be speckled with white or iridescent. Bill yellow during the spring and summer. Flies swiftly and in a straight line. Frequent invader of attics, eaves, vents, and miscellaneous openings.

Access Routes

Any place with an open flight lane.

Entry Sites

Vents (roof, soffit, gable, bathroom, kitchen stove hood); any openings large enough on the outside of the structure.

Sounds

Song is diverse and rather squeaky. Often mimics other bird species.

Fecal Droppings

"White wash."

Other Signs

Nest (loose accumulation of grass, twigs, and similar materials) placed in a hole or other cavity in the house exterior.

Rock Dove (feral pigeon)

Plump bird with small head and fan-like tail. Color very variable but typically gray. White rump usually distinctive. The average weight is 13 oz. When taking off, their wing tips touch, making a characteristic clicking sound. When gliding, their wings are raised at an angle. Diurnal (active during day). Frequent invader of upper portions of buildings and attics.

Access Routes

Any place with an open flight lane.

Entry Sites

Any structure on building that provides some protection from weather. Enters attics through deteriorated woodwork or broken windows/vents.

Sounds

Cooing.

Fecal Droppings

White/gray. Often accumulate.

Odor

Pungent; associated with fecal matter.

Other Signs

Feathers; nests (sticks and grasses arranged in a crude platform); broken egg shells.

Woodpeckers

Several species ranging in size from small (less than 7 inches long) to almost crow-sized (about 20 inches long). Most species are similar in size to robins (around 10 inches long). Most species are black and white with some red on the head. Woodpeckers are active during the day. They will perch on the sides of trees and wood buildings to drill holes and/or search for insects. They can do considerable damage to wood buildings. Birds will occaisionally nest inside hollow walls after drilling an opening.

Access Routes

Any place where birds can easily fly to and from, especially in the vicinity of trees.

Entry sites

Wood siding.

Sounds

Loud calls which are distinct for each species. Territorial "drumming" caused by rhythmic pecking on dead wood, buildings, or metal.

Fecal Droppings

"White wash."

Other signs

Holes in wood siding caused by drilling.

Snakes

Well-known slender, legless body shape. Color and body markings vary by species. Most snakes in the Northeast are not venomous. Frequent invaders of basements. Occasionally found in wall voids and attics. May be attracted by rodents or insects.

Access Routes

Physical cover near the foundation can facilitate access (e.g., firewood or debris piles, vegetation).

Entry Sites

Openings usually in vicinity of foundation.

Fecal Droppings

Often elongated; partially white.

Other Signs

Shed skins.

Appendix B: Inspection Form

Building	Date
Inspector	Time
Contact Person	

Exterior

Location	Observations
Foundations	
Soffits/Eaves	
Windows	
Dormers	
Vents	
Chimneys	
Attached Garages	
Other	

Interior

Location	Observations
Attic	
Second Floor	
First	
Basement	
Other	

Appendix C: Animal-Specific Form

Structural Inspection for Bats

Signs of Bat Activity
Attic/Crawl Spaces
Basement
Other Locations
Openings into Living Space
Attic Door
Holes in Walls/Ceiling
Baseboards/Molding
Baseboards/Molding
Pocket Doors
Other
Outside Openings
Dormers
Eaves
Soffit Boards
Vents
Chimneys
Other

Appendix D: Helpful Resources

Suppliers and Manufacturers

NOTE: These suppliers are listed here for your convenience; this is not an exhaustive list nor does inclusion indicate an endorsement by the New York State IPM Program, Cornell Cooperative Extension or Cornell University.

For Inspections

Forestry Suppliers, Inc.

P.O. Box 8397
Jackson, MS 39284-8397
1-800-360-7788

Gempler's

211 Blue Mounds Road
P.O. Box 270
Mt. Horeb, WI 53572
1-800-382-8473
www.gemplers.com

Jim Simmons Company

952 Main Street
Nashville, TN 37206
1-800-251-4931

Lab Safety Supply Inc.

P.O. Box 1368
Janesville, WI 53547-1368
1-800-356-0783

Professional Equipment

90 Plant Avenue, Suite 3
Hauppauge, NY 11788-3813
1-800-334-9291

For Removal

Traps

Animal Care Equipment and Services, Inc.

PO Box 3275, 613 Bert Way
Crestline, California 92325
1800-338-ACES

Bird Barrier America, Inc.

1312 Kingsdale Ave.
Redondo Beach, CA 90278
1-800-503-5444
www.birdbarrier.com

Gremar, Inc.

PO Box 65003
West Des Moines, IA 50265
1-800-597-3867

Kness Mfg. Co., Inc.

Box 70, Hwy 55
Albia, IA 52530
1-800-247-5062

M & M Fur Co.

Box 15
Bridgewater, DS 57319
1-800-658-5554

Tomahawk Live Trap Co.

PO Box 325
Tomahawk, WI 54487
1-800-272-8727
www.livetrap.com

Tru-Catch Traps

Box 816
Belle Fourche, SD 57717
1-800-247-6132

Whitmore Micro-Gen Corp.

10700 Sentinel Drive
San Antonio, TX 78217
1-800-777-8570

Wilco Distributors, Inc.

1215 W. Laurel Ave, Box 291
Lompoc, CA 93436
805-735-2476

Wildlife Management Supplies

9435 E. Cherry Bend
Traverse City, MI 49684
1-800-451-6544

Woodstream Corp.

69 N. Locust
Lititz, PA 17543
717-626-2125

Direct Capture

Animal Care Equipment and Services, Inc.

(see above)

Fuhrman Diversified, Inc.

905 S. 8th Street
LaPorte, TX 77571
713-470-8397

Ketch-All Co.

4149 Santa Fe Rd. #2
San Luis Obispo, CA 93401
805-543-7223

Wildlife Management Supplies

(see above)

Repellents

Bird-X, Inc.

730 W. Lake St.
Chicago, IL 60661
1-800-662-5021

Bird Barrier America, Inc.

(see above)

Burlington Scientific Corp.

222 Sherwood Ave.
Farmingdale, NY 11735
516-694-9000

J.T. Eaton & Co., Inc.

1393 E. Highland Rd.
Twinsburg, OH 44087
1-800-321-3421

Van Waters and Rogers

Box 34325
Seattle, WA 98124
206-889-3400

One-Way Doors

Tomahawk Live Trap Co.
(see above)

Pesticides

Avitrol Corp.

7644 East 64th St.
Tulsa, OK 74145
1-800-633-5069
www.avitrol.com

J.C. Ehrlich Chemical Co.

500 Spring Ridge Dr.
Reading, PA 19612
1-800-488-9495

J.T. Eaton & Co., Inc.

(see above)

Lipha Tech, Inc.

3600 W. Elm St.
Milwaukie, WI 53209
1-800-558-1003

Van Waters and Rogers

(see above)

Wilco Distributors, Inc.

(see above)

York Distributors

120 Express St.
Plainview, NJ 11803
1-800-645-6007

Zeneca Professional Products

PO Box 751
Wilmington, DE 19897
1-800-759-2500

For Exclusion

Todol Foam Gun

PVE
P.O. Box 84
Pennsburg, PA 18073
1-800-724-9468

Wildlife Control Supplies, Inc.

P.O. Box 125
Cortland, IL 60112
(815) 286-9251

Wildlife Management Supplies

9435 E. Cherry Bend
Traverse City, MI 49684
1-800-451-6544

Vents

Louvers

Lomanco

P.O. Box 519
Jacksonville, AR 72076
1-800-643-5596

Dryer Vents & Vent Pipe Shields

Wildlife Management Supplies

see above listing

Chimney Covers

Copperfield Chimney Supply, Inc.

P.O. Box 664, 304 S. 20th St.
Fairfield, IA 52556
1-800-247-3305

HY-C Company, Inc.

2107 N. 14th St.
St. Louis, Missouri 63106
1-800-325-7076

Bird Exclusion

Bird Barrier America, Inc.

1312 Kingsdale Ave.
Redondo Beach, CA 90278
1-800-503-5444
www.birdbarrier.com

Bird-B-Gone, Inc.

24362 Via Madrugada
Mission Viejo, CA 92692
1-800-392-6915
www.birdbgone.com

Bird-X, Inc.

730 W. Lake St.
Chicago, IL 60661
1-800-662-5021

D&S Specialty Products

13611 N.E. 126th Place #200
Kirkland, WA 98034
1-800-820-1980

InterNet, Inc.

7300 49th Ave.
Minneapolis, MN 55428
1-800-328-8456

Publications

General Reference

Cornell Cooperative Extension Department of Natural Resources Fact Sheets for: Birds, Raccoons, Snakes,Tree Squirrels, and Woodchucks are available through Cornell Media Services, <www.mediasvcs.cornell.edu>, resctr@cornell.edu, 607-255-2080.

Bennet, Gary W., John M. Owens, and Robert M. Corrigan. 1997. Truman's Scientific Guide to Pest Control Operation, 5th edition. Purdue University, West Lafayette, Indiana, and Advanstar Communications, Cleveland, Ohio.

Hadidian, John, G. Hodge, J. Grandy, eds. 1997. Wild Neighbors: The Humane Approach to Living with Wildlife. The Humane Society of the United States, Washington, D.C. and Fulcrum Publishing.

Hygnstrom, Scott E., Robert M. Timm, and Gary E. Larson, editors. 1994. Prevention and Control of Wildlife Damage. 822 pp., 2 volumes. Univ. Nebr. Coop, Extension, USDA-APHIS-Animal Damage Control, and Great Plains Agricultural CouncilWildlife Committee; Nebraska Cooperative Extension, 202 Natural Resources Hall, University of Nebraska, Lincoln, NE 68583-0819. Phone: (402) 472-2188.

Inspection

Burt, William H. and Richard P. Grossenheider. 1976. A Field Guide to the Mammals; Field Marks of All North American Species Found North of Mexico. 289 pp. Houghton Mifflin Company, Boston.

Murie, Olaus J. 1975. A Field Guide to Animal Tracks, 2nd edition. 375 pp. Houghton Mifflin Co., Boston.

Petersen, Roger Tory. 1980. A Field Guide to the Birds. 384 pp. Houghton Mifflin Co., Boston.

Pinto, Lawrence and S. Kraft. 2000. Pest Control Technician Safety Manual. Pinto & Associates: Maryland.

Vantassel, Stephen, and Tom Olander. 1998. Wildlife Damage Inspection Handbook. Contact: Wildlife Damage Control, 340 Cooley Street, Springfield, MA 01128; <admin@wildlifedamagecontrol.com>.

Removal

American Veterinary Medical Association Panel on Euthanasia. 1993 Report of AVMA Panel on Euthanasia. JAVMA 202(2):229-249.

Bookhout, Theodore A., editor. 1994. Research and Management Techniques for Wildlife and Habitats, 5th edition. 740 pp. The Wildlife Society, Bethesda, Maryland.

Craven, Scott, Thomas Barnes, and Gary Kania. 1998. Toward a professional position on the translocation of problem wildlife. Wildlife Society Bulletin 26(1):171-177.

Evict and Exile Mice from Your Home. 2000. New York State IPM Program publication number 603. Contact the NYS IPM Program: NYSAES, Geneva, NY 14456; 800-635-8356; <www.nysaes.cornell.edu/ipmnet.ny>.

Mosillo, Maia, Edward J. Heske, and John D. Thompson. 1999. Survival and movements of translocated raccoons in northcentral Illinois. Journal of Wildlife Management. 63(1):278-286.

Vantassel, Stephen. 1998 Wildlife Removal Handbook: A Guide for the Control and Capture of Wild Urban Animals. Wildlife Damage Control: Springfield, MA.